# Wide Mouth Shackle G-4263

## Product information

Bow shackles with safety bolt.

**Certification:** This product can be supplied with a works certificate, 3.1 material certificate, manufacturer test certificate and/or EC Declaration of Conformity.

**Material:** Bow and pin alloy steel, quenched and tempered
**Marking:** CE-marked
**Temperature range:** -20°C up to +200°C
**Finish:** Hot dip galvanized
**Note:** This shackle can also be delivered with fixed nut (an extra AISI 316 securing bolt is drilled through both the nut and shackle pin. This securing bolt is fastened with two sets of Nord-Lock®

**Safety factor:** 6:1
**Grade:** 8

| Part Code | WLL ton | A mm | B mm | C mm | D mm | e mm | f mm | g mm | h mm | i mm | j mm | k mm | Weight kg |
|---|---|---|---|---|---|---|---|---|---|---|---|---|---|
| 420100481020 | 4.75 | 22 | 25 | 52 | 22 | 63 | 112 | 88 | 173 | 157 | 132 | 23 | 2.08 |
| 420100651020 | 6.5 | 25 | 28 | 59 | 25 | 75 | 135 | 105 | 204 | 183 | 155 | 25 | 3.14 |
| 420100851020 | 8.5 | 28 | 32 | 66 | 28 | 82 | 148 | 115 | 225 | 205 | 171 | 27 | 4.36 |
| 420100951020 | 9.5 | 32 | 35 | 72 | 32 | 90 | 162 | 126 | 248 | 224 | 190 | 30 | 5.95 |
| 420101201020 | 12 | 35 | 38 | 79 | 35 | 100 | 180 | 140 | 274 | 245 | 210 | 33 | 7.87 |
| 420101601020 | 16 | 38 | 42 | 88 | 38 | 106 | 216 | 159 | 319 | 248 | 235 | 19 | 12.5 |
| 420102501020 | 25 | 45 | 50 | 103 | 45 | 127 | 248 | 175 | 370 | 296 | 265 | 23 | 16.7 |
| 420103001020 | 30 | 50 | 57 | 118 | 50 | 146 | 273 | 207 | 411 | 332 | 307 | 26 | 25 |
| 420105501020 | 55 | 65 | 70 | 145 | 65 | 165 | 314 | 213 | 487 | 391 | 343 | 32 | 45 |
| 420107501020 | 75 | 83 | 83 | 164 | 83 | 184 | 330 | 254 | 537 | 460 | 420 | 39 | 70 |
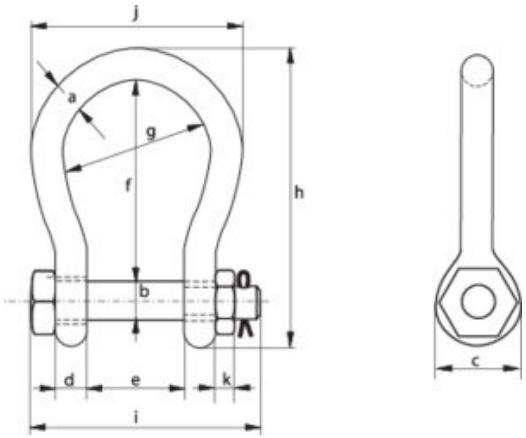
## Blueprint